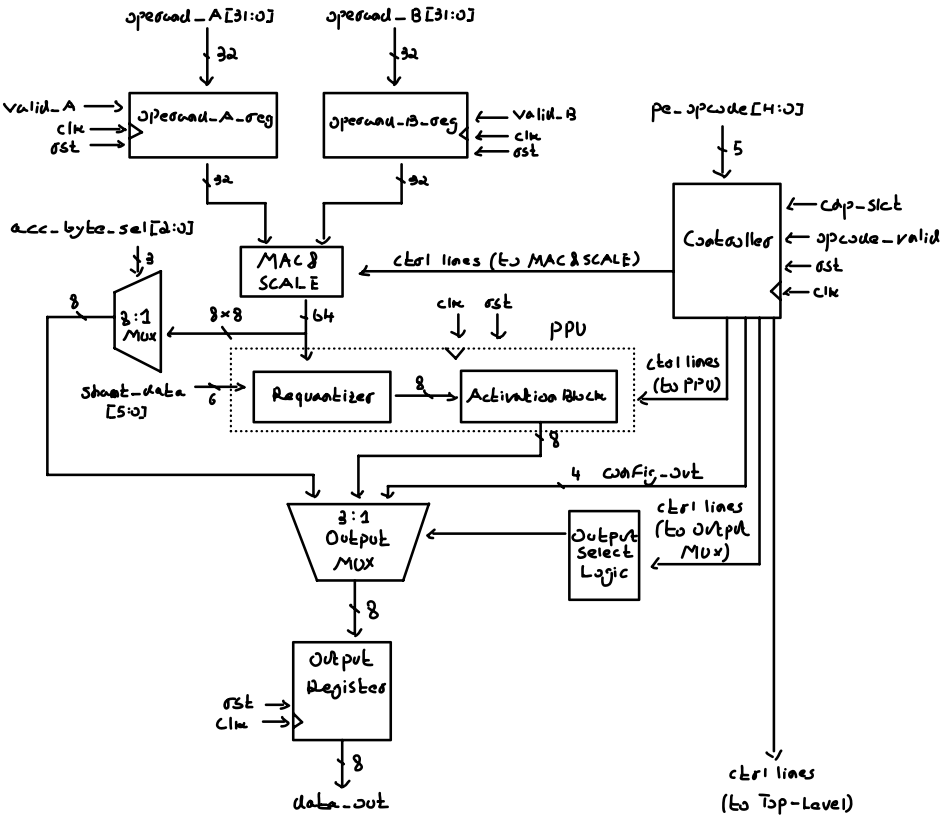
operand_A[31:0]
32
operand_B[31:0]
32
valid_A
clk
rst
operand_A_reg
operand_B_reg
valid_B
clk
rst
32
32
pe_opcode[4:0]
5
cap_slct
opcode_valid
rst
clk
Controller
acc_byte_sel[2:0]
3
MAC & SCALE
ctrl lines (to MAC & SCALE)
8
3:1 MUX
8×8
64
clk
rst
PPU
ctrl lines (to PPU)
Shift_data [5:0]
6
Requantizer
8
Activation Block
8
4
config_out
3:1 Output MUX
Output Select Logic
ctrl lines (to output MUX)
8
Output Register
rst
clk
8
data_out
ctrl lines (to Top-Level)

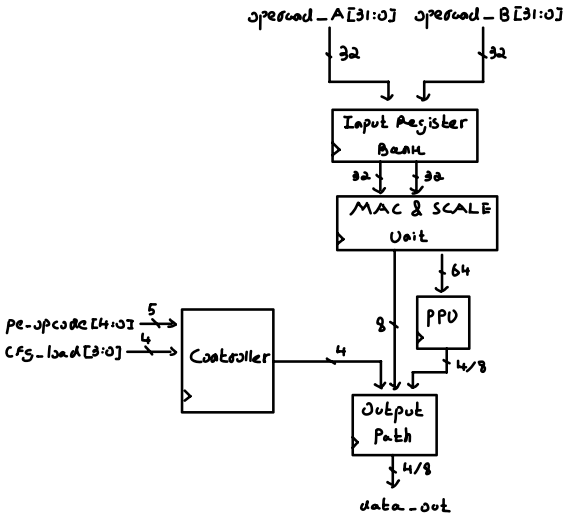
operand_A[31:0]
operand_B[31:0]
32
32
Input Register Bank
32
32
MAC & SCALE Unit
64
PPU
8
4/8
pe-opcode[4:0]
5
cfg_load[3:0]
4
Controller
4
Output Path
4/8
data_out